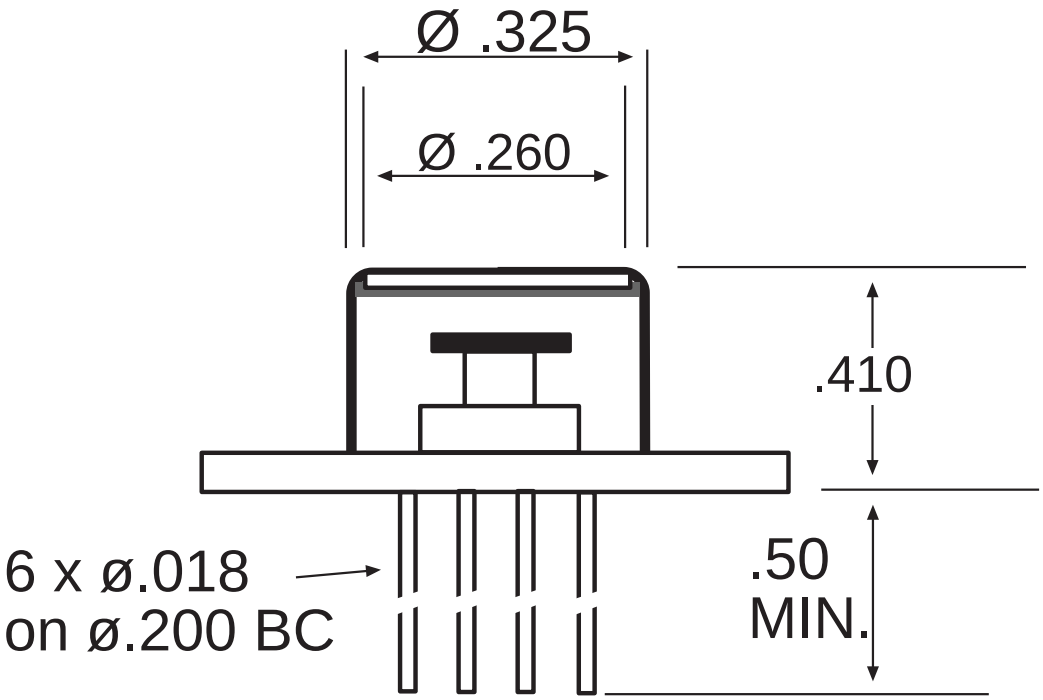
Ø .325
Ø .260
.410
6 x ø.018
on ø.200 BC
.50
MIN.

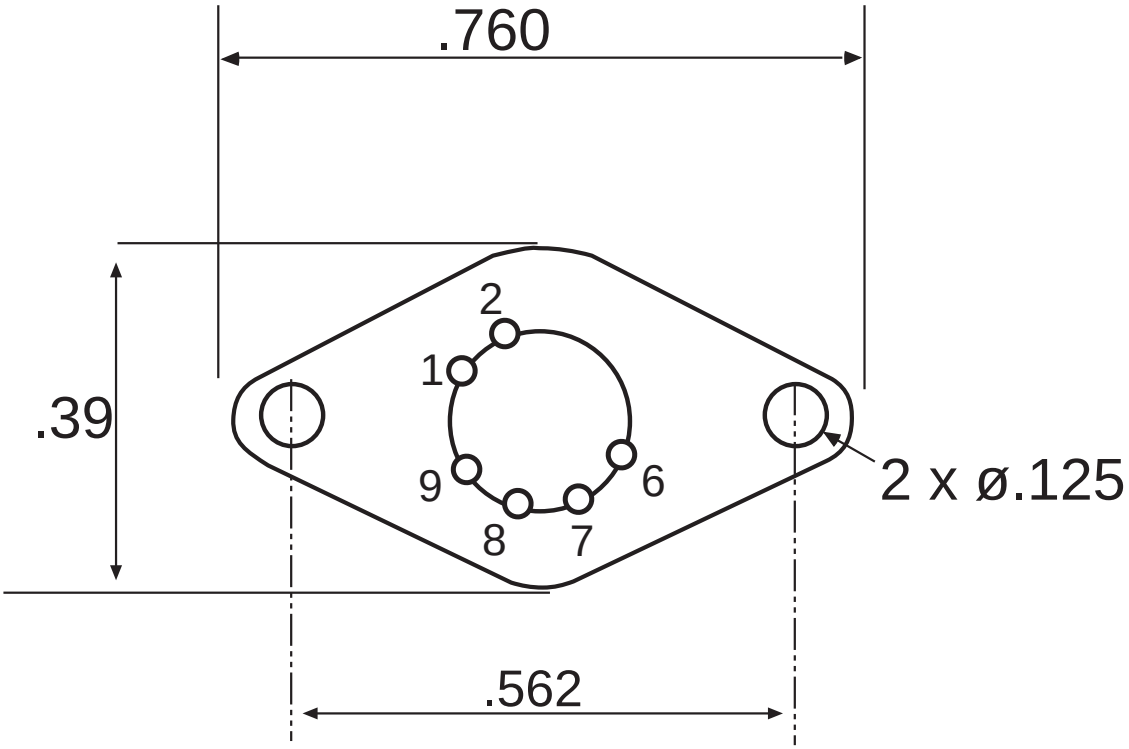
.760
.39
2
1
9
8
7
6
2 x ø.125
.562