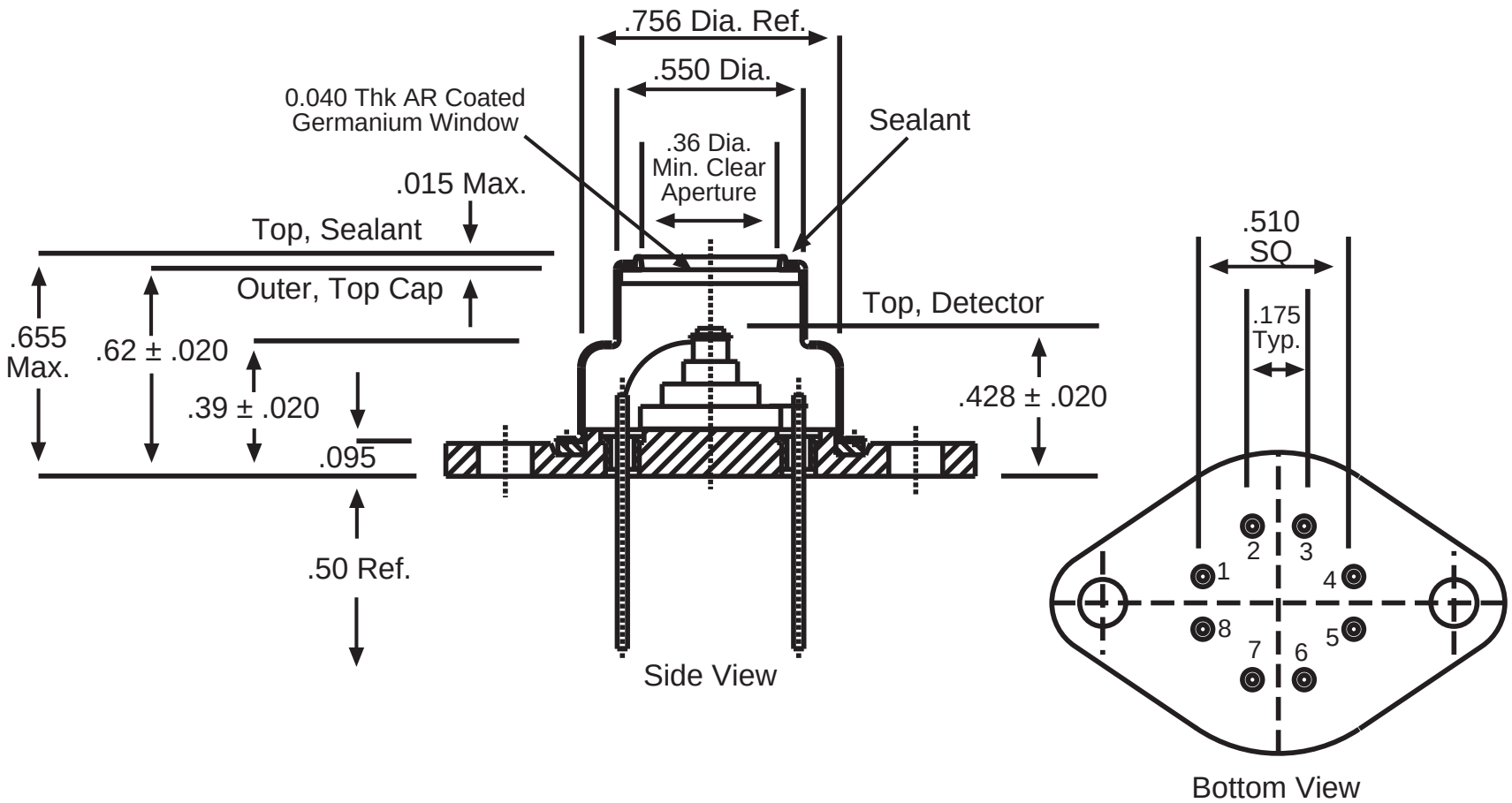
.756 Dia. Ref.
.550 Dia.
0.040 Thk AR Coated
Germanium Window
Sealant
.36 Dia.
Min. Clear
Aperture
.015 Max.
Top, Sealant
Outer, Top Cap
Top, Detector
.655
Max.
.62 ± .020
.39 ± .020
.095
.428 ± .020
.50 Ref.
Side View
.510
SQ
.175
Typ.
1
2
3
4
5
6
7
8
Bottom View