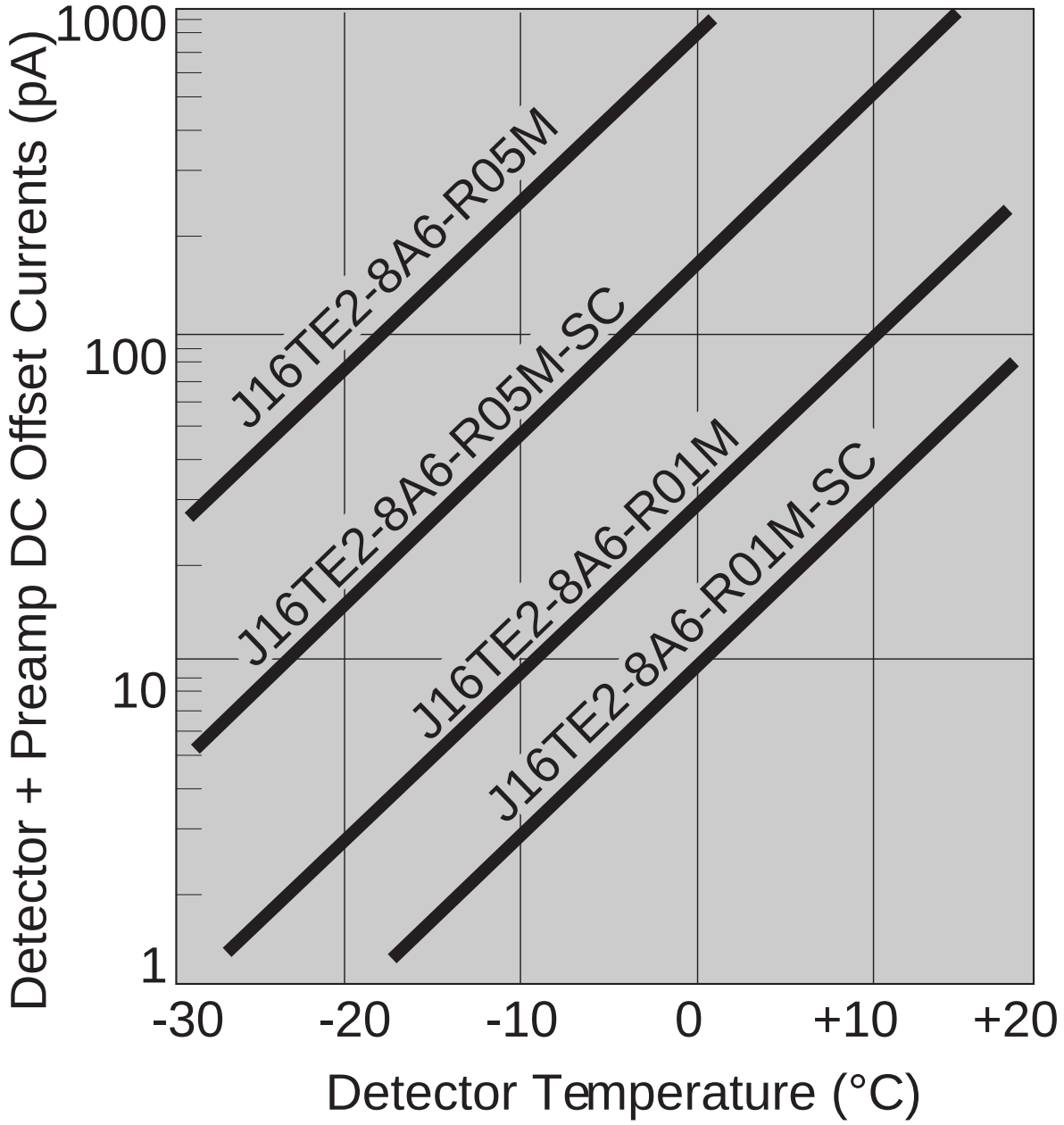
1000
100
10
1
Detector + Preamp DC Offset Currents (pA)
-30
-20
-10
0
+10
+20
Detector Temperature (°C)
J16TE2-8A6-R05M
J16TE2-8A6-R05M-SC
J16TE2-8A6-R01M
J16TE2-8A6-R01M-SC

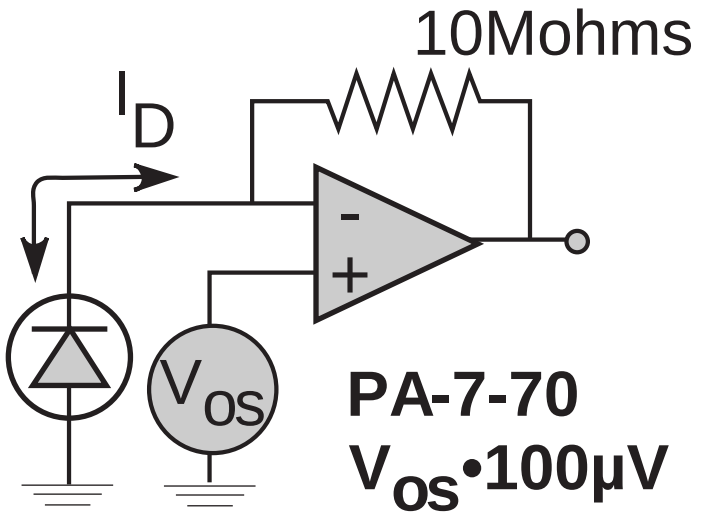
10Mohms
I D
-
+
V OS
PA-7-70
V OS •100µV