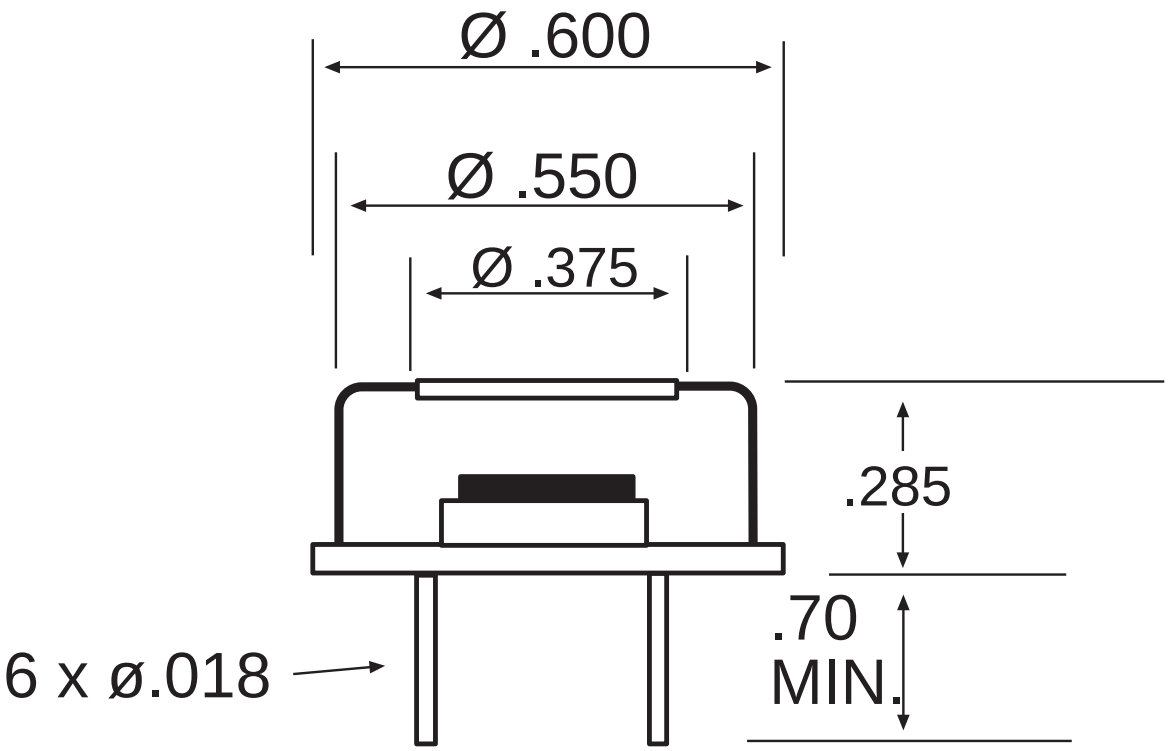
Ø .600
Ø .550
Ø .375
.285
.70
MIN.
6 x ø.018

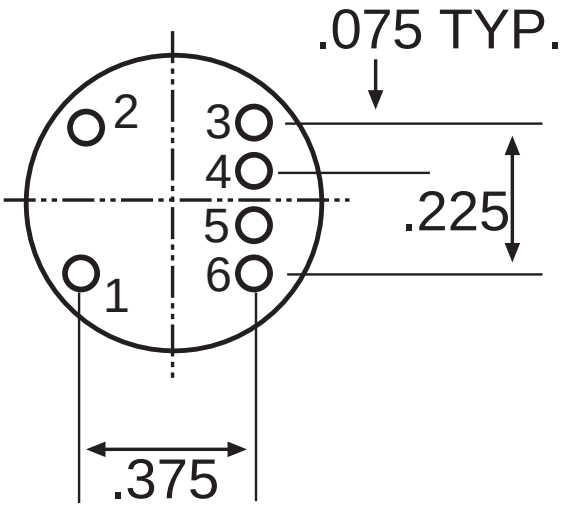
.075 TYP.
2
3
4
5
6
1
.225
.375