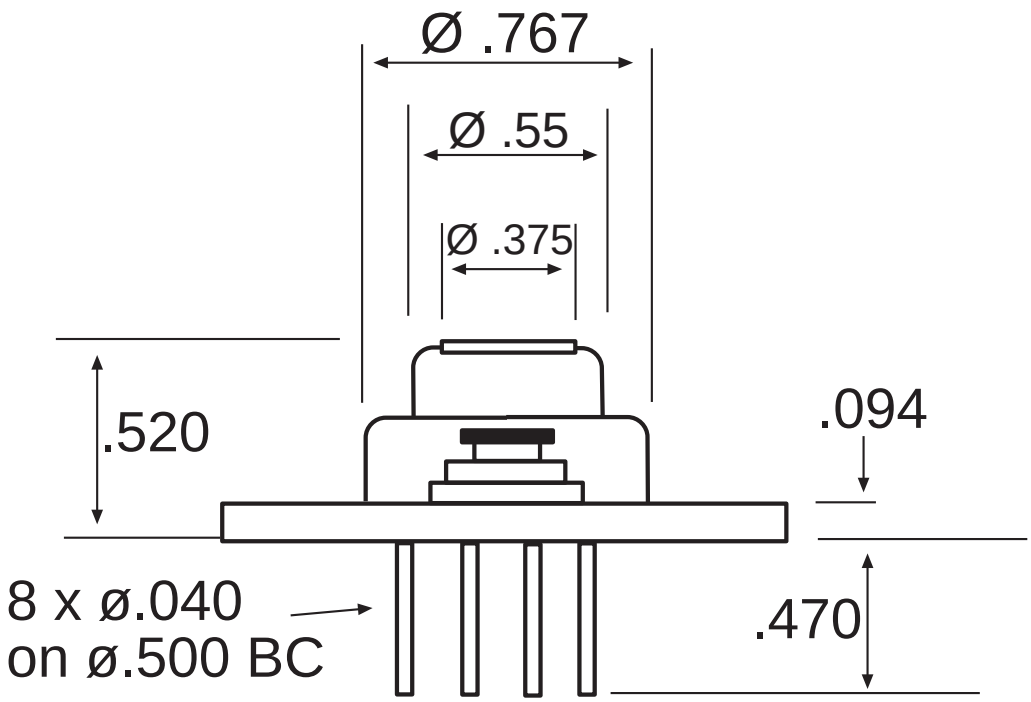
Ø .767
Ø .55
Ø .375
.520
.094
8 x ø.040
on ø.500 BC
.470

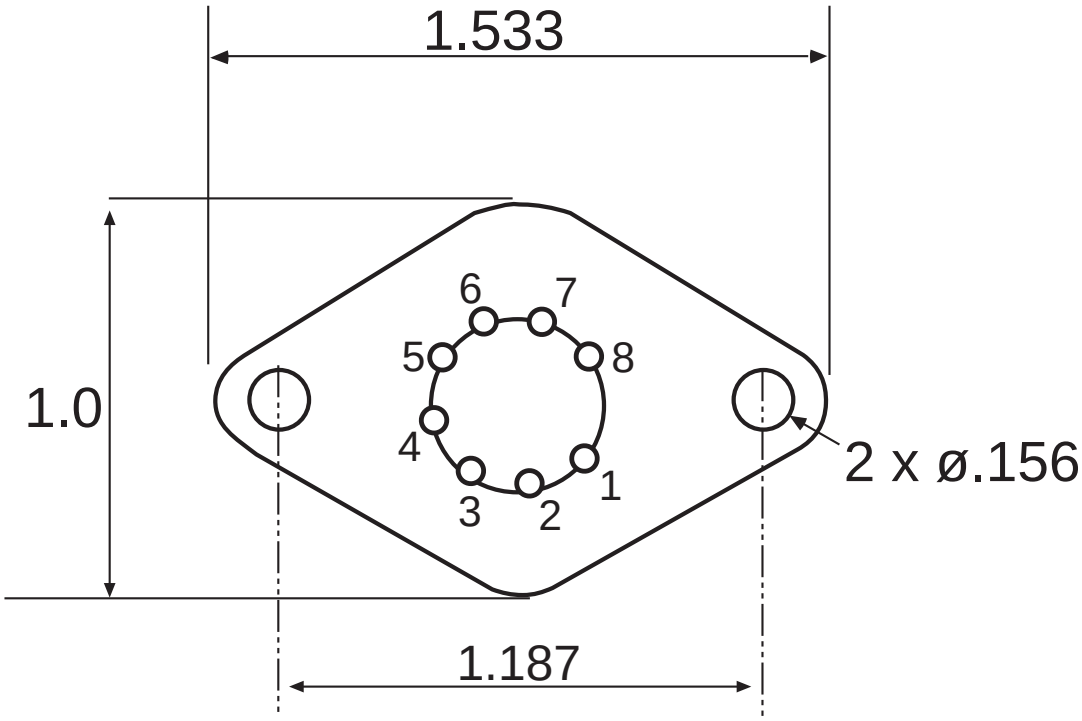
1.533
1.0
6
7
5
8
4
1
3
2
2 x ø.156
1.187