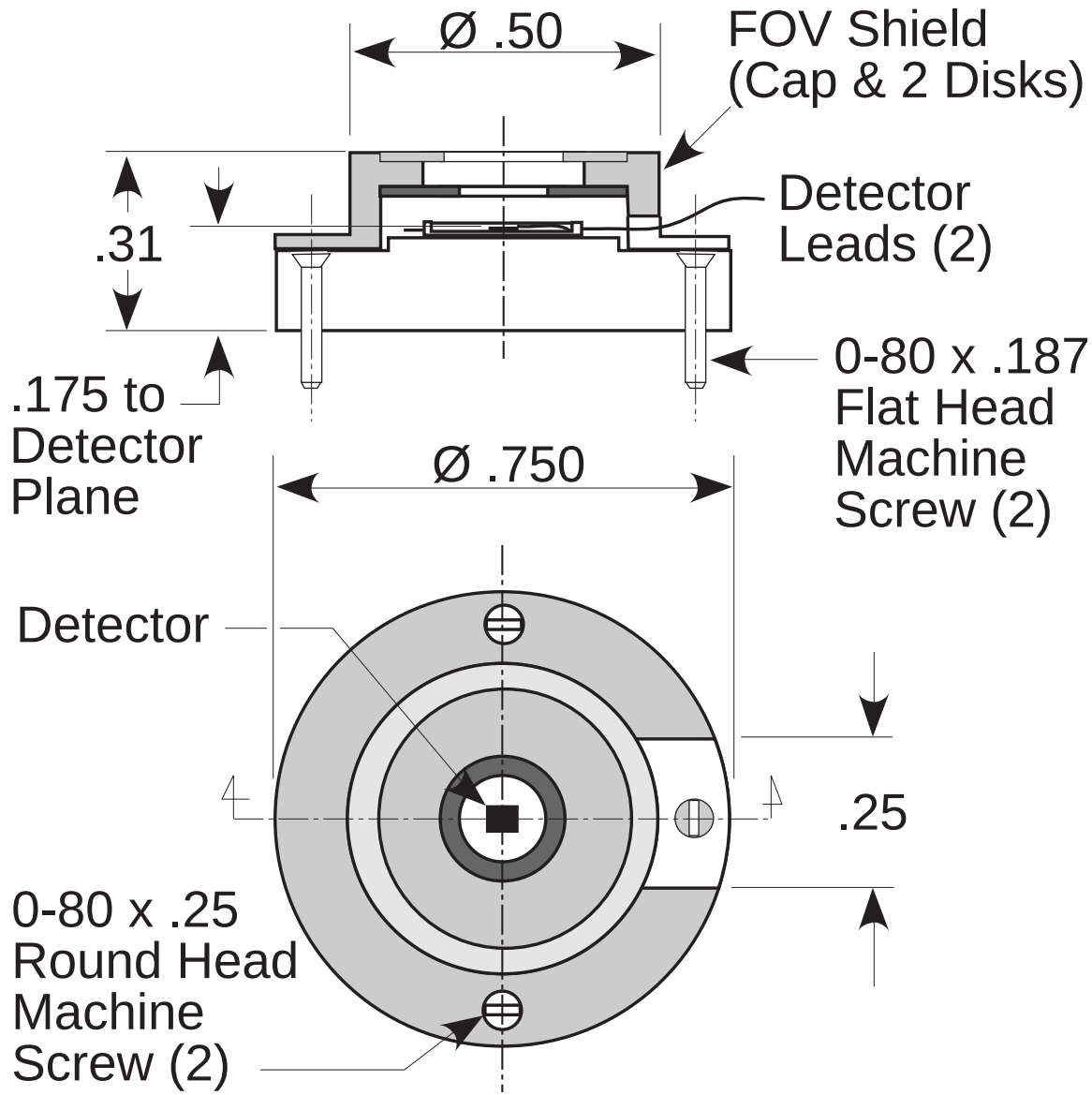
Ø .50
FOV Shield
(Cap & 2 Disks)
Detector
Leads (2)
.31
0-80 x .187
Flat Head
Machine
Screw (2)
.175 to
Detector
Plane
Ø .750
Detector
.25
0-80 x .25
Round Head
Machine
Screw (2)